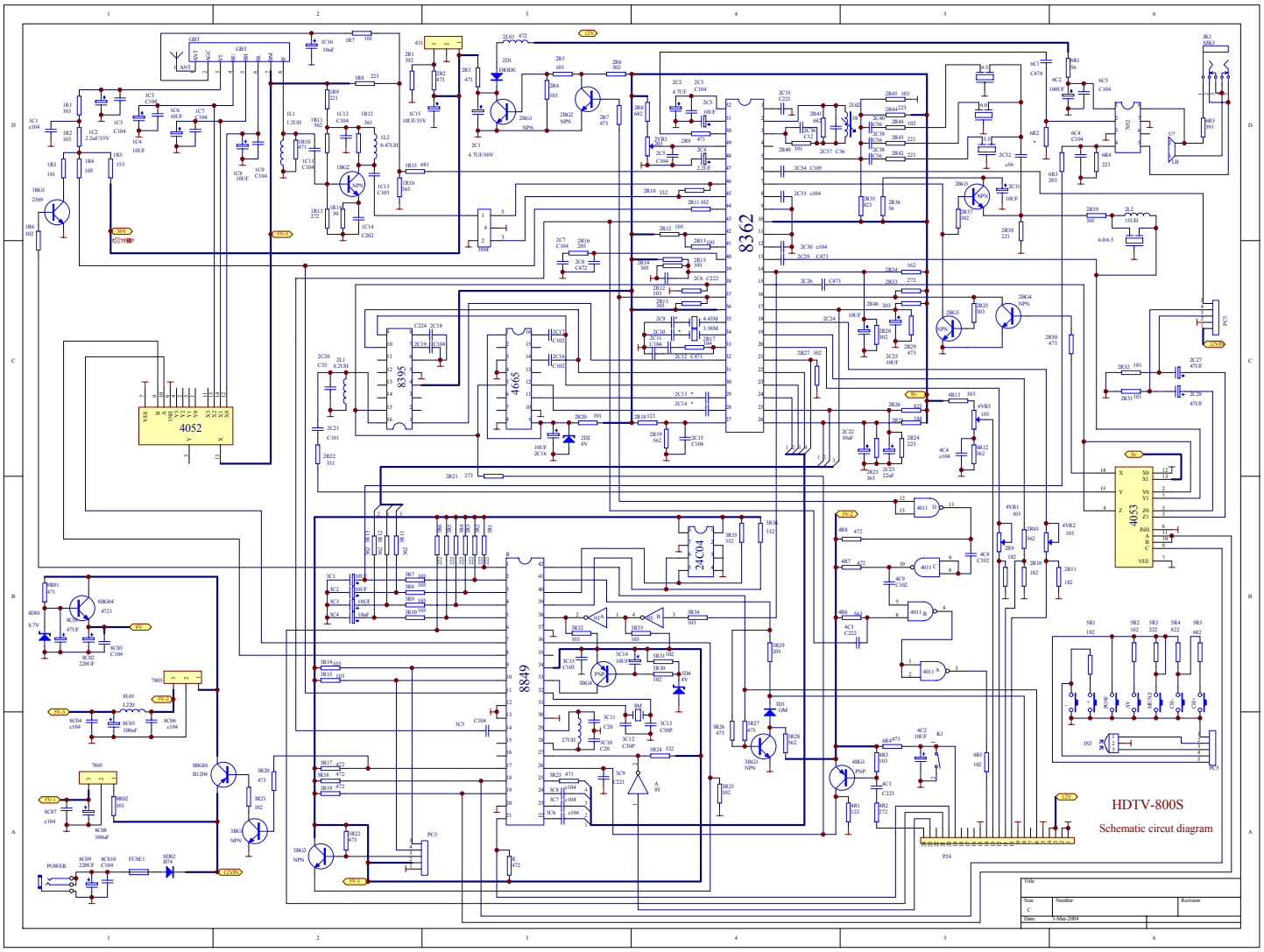
HDTV-800S
Schematic circut diagram
8362
8395
4665
4052
8849
24C04
4053
Title
Size
C
Number
Revision
Date: 3-Mar-2004