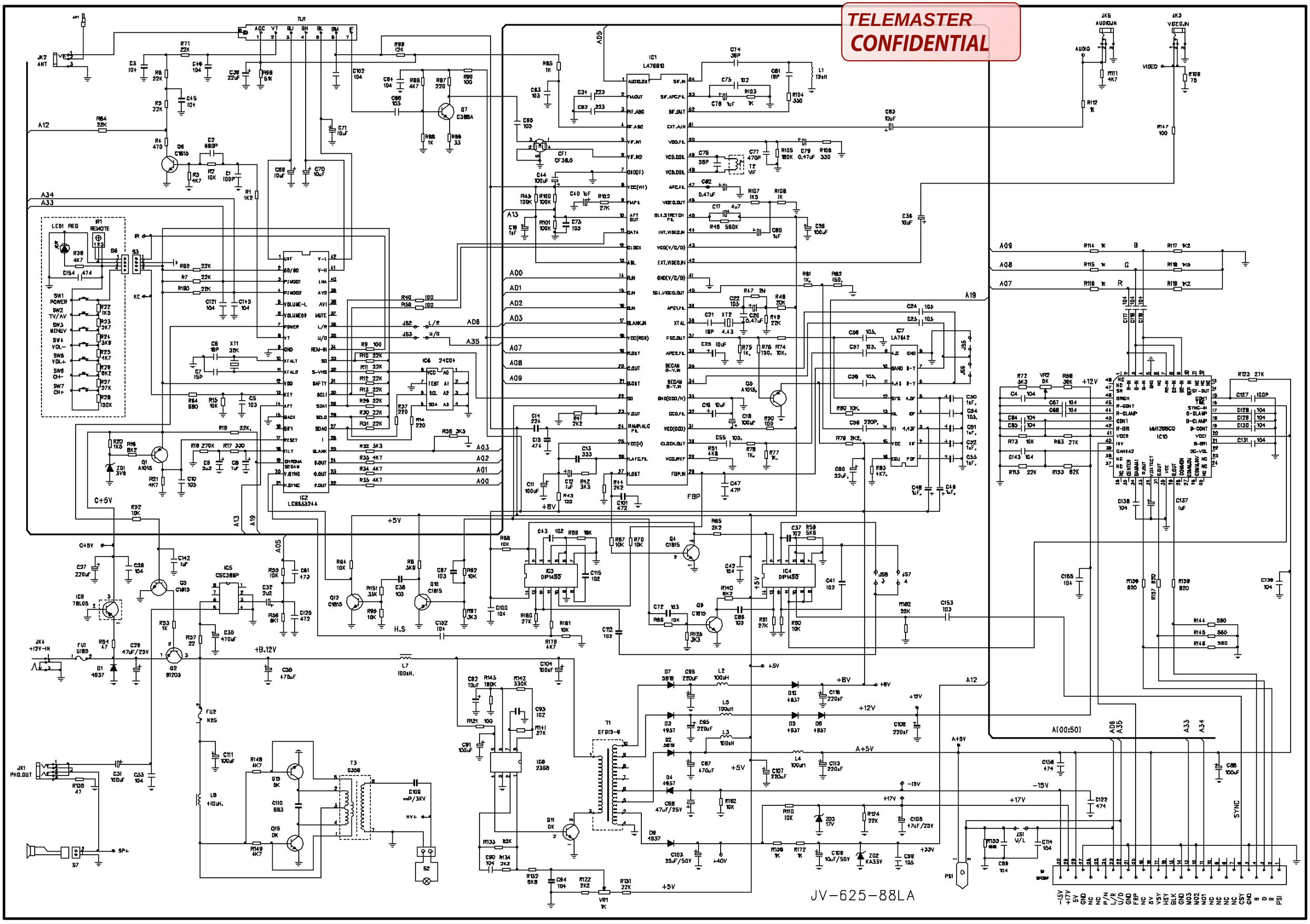
TELEMASTER
CONFIDENTIAL
JV-625-88LA
IC1 LA78810
IC2 LC863324A
IC3 DP1450
IC4 DP1450
IC5 CSC388P
IC6 2388
IC7 LA7642
IC8 78L05
IC9 24C04
IC10 MM1268CD
T1 EFD15-6
T3 0308
TU1
JK2 ANT
JK4 +12V-IN
JK1 PHO.OUT
JK5 AUDIO.IN
JK3 VIDEO.IN
S7
PS1
+B.12V
+5V
+8V
+12V
A+5V
+17V
-15V
+33V
+46V
HV+
SP+
H.S
FBP
SYNC
A[00:50]