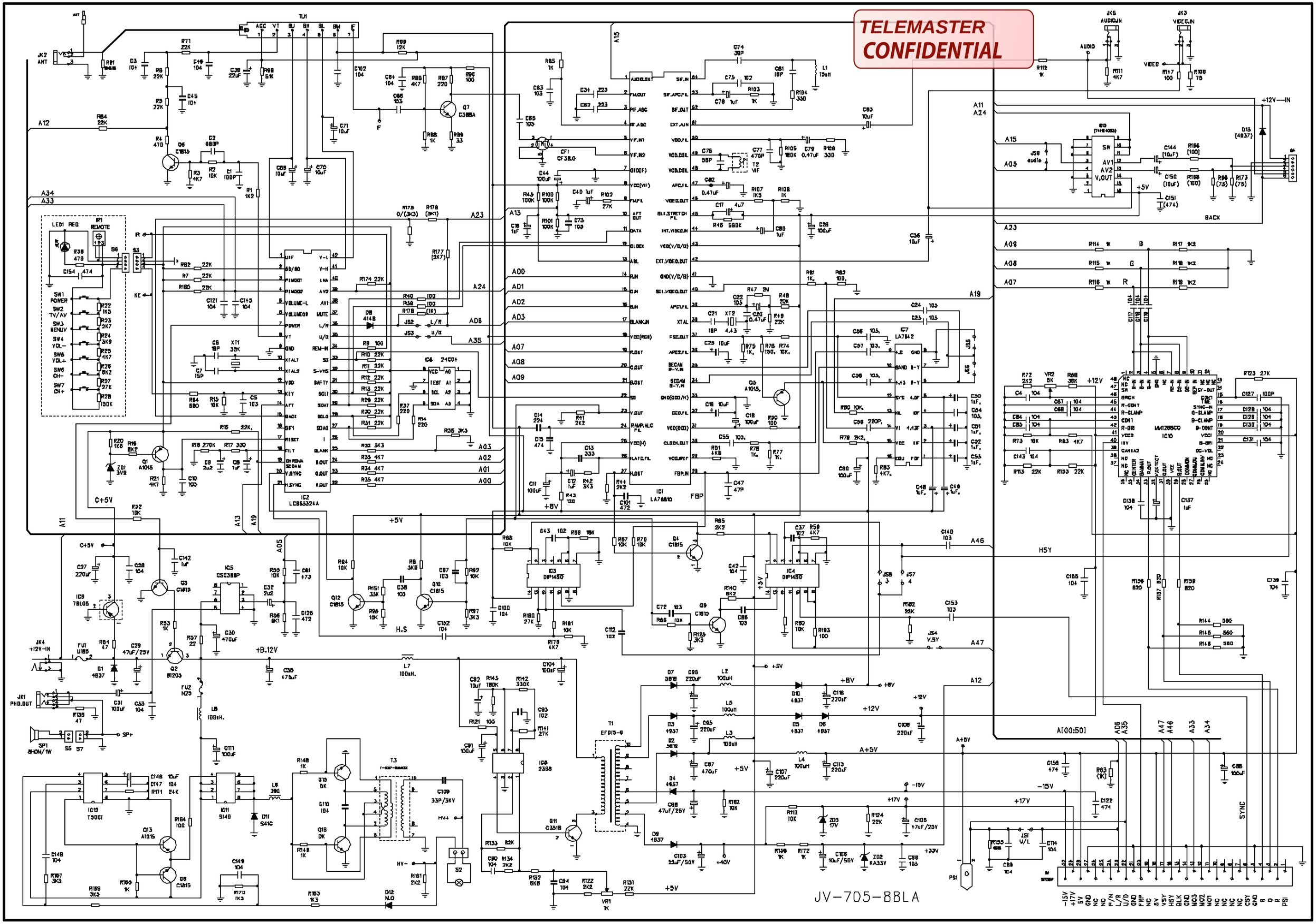
TELEMASTER
CONFIDENTIAL
JV-705-8BLA