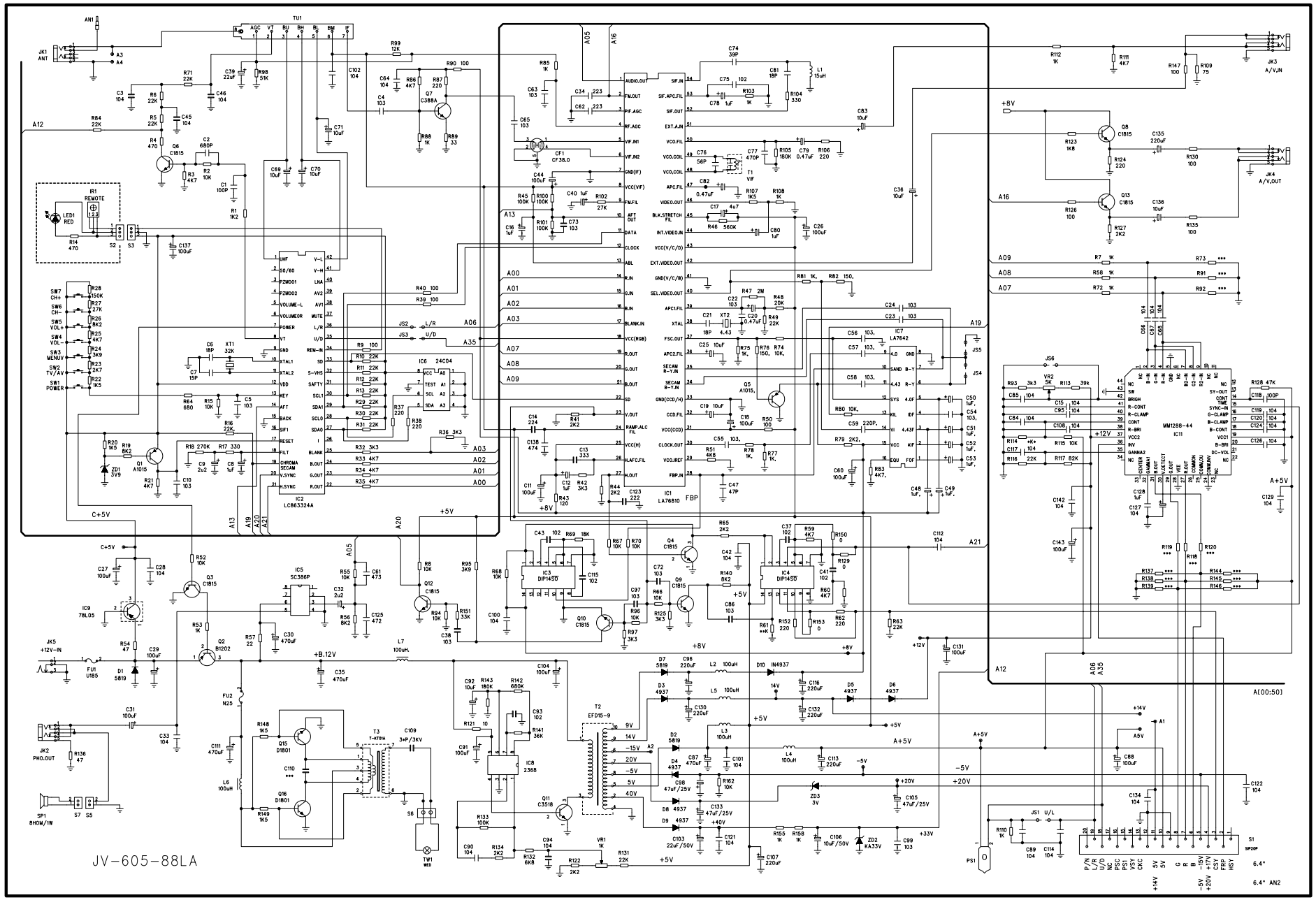TELEMASTER
CONFIDENTIAL