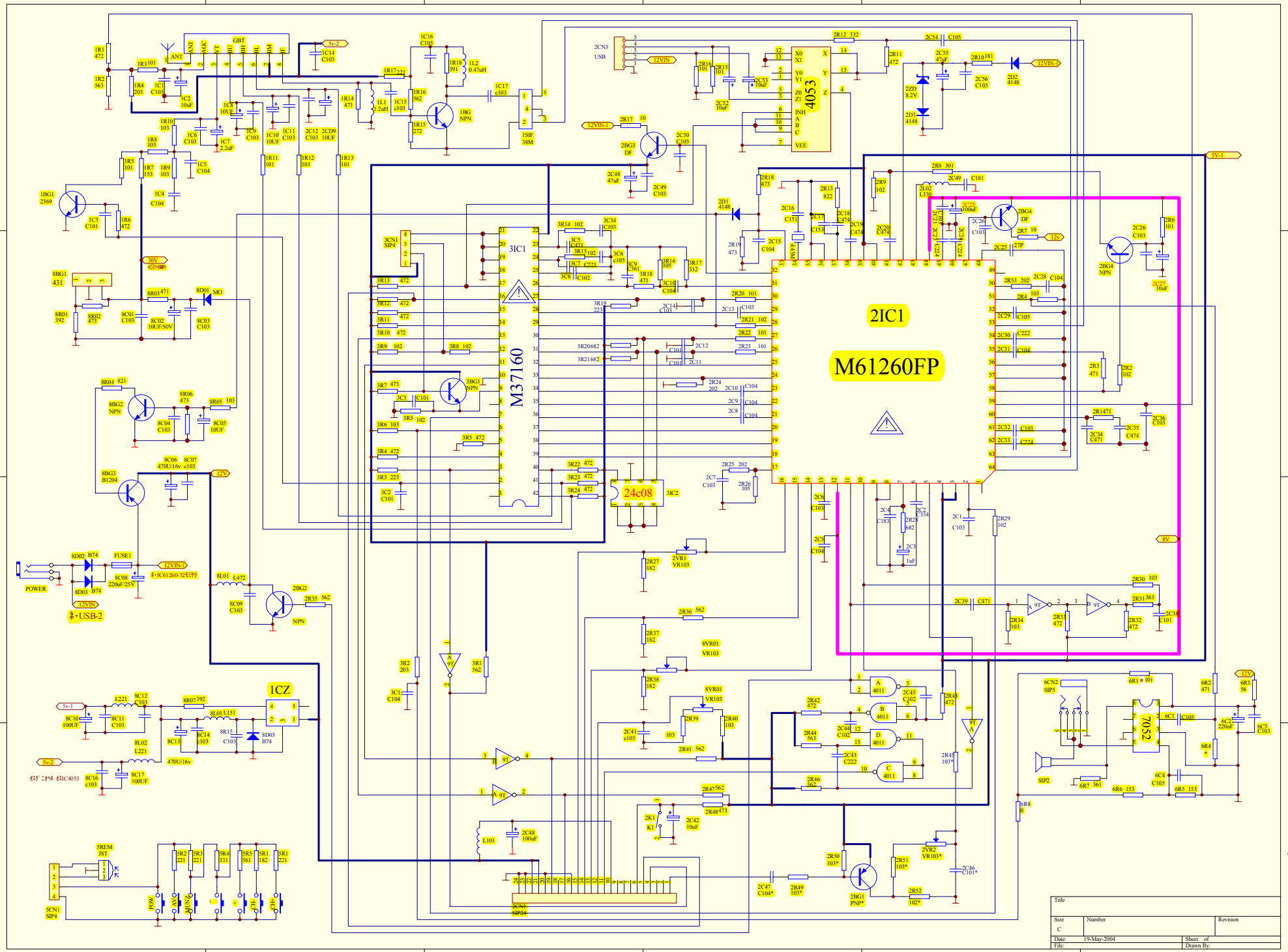
2IC1
M61260FP
3IC1
M37160
24c08
4053
7052
1CZ
POWER
USB-2
Title
Size
C
Number
Revision
Date: 19-May-2004
Sheet of
File:
Drawn By: